GeoFilter GFA

Modular filtrationsystem

Modular filter solution for effective filtration of extracted air from processes such as welding, grinding, sandblasting, laser-cutting & powder enameling. GeoFilter GFA is suitable for air flows up to 12.000 m³/h depending on dust/fume load. Should the need for larger capacity arise, several filters can be connected in parallel. The filter cartridges are cleaned by a fully automated pneumatic cleaning system.

Features

Modular design	Several filters can be connected in parallel
Cabinet	Galvanised & powder enamel.
Filter cleaning system	PLC controlled pneumatic system with one pulse valve per filter cartridge. Adjustable cleaning cycle & clock.
Pneumatic cleaning tank	Integrated in door, 15 litre per module.
Filtration efficiency	Minimum 99,90% at 0,3 µm in reference to BIA-test U.S.G.C.
Filter substitution	Easy to change through the lockable door.
Collection system	The dust is collected in a bucket with snap lock under the filter cone, for easy emptying.

Options

Manometer	Measures the pressure drop over the filter
Filter regulator	Regulation of the pneumatic pulse system
Extension leg with extra big bucket.	Suitable for large dust concentrations.
Filter alarm	Alerts the user when filter catridges is to be replaced.

GEOVENT

Brevo B.V.
Dokwerkerstraat 3
2984 BJ Ridderkerk
Telefoon 0180-417344, Fax 0180-411563
Email : info@brevo.nl, Web : www.puntafzuiging.nl

April 2002

Filter GFA-6000

Art. No.	15-860	15-861	15-862
No. of filter cartridges	4	6	8
Filter type	FT/11	FT/11	FT/11
Filter area [m²]	48	72	96
No. of pulse valves	4	6	8
Air flow [m³/h]	3000	4500	6000
Inlet [mm]	3 x ø250	3 x ø250	3 x ø250
Outlet [mm]	3 x ø250	3 x ø250	3 x ø250
Dust collector	1 x 25 l	2 x 25 l	2 x 25 l

Filter GFA-12000

Art. No.	15-865	15-866	15-867
No. of filter cartridges	12	14	16
Filter type	FT/11	FT/11	FT/11
Filter area [m²]	144	168	192
No. of pulse valves	12	14	16
Air flow [m³/h]	9000	10500	12000
Inlet [mm]	3 x ø250	3 x ø250	3 x ø250
Outlet [mm]	3 x ø250	3 x ø250	3 x ø250
Dust collector	2 x 60 l	2 x 60 l	2 x 60 l

Type of filter	Filtration efficiency	BIA-test	Material	Coating	Antistatic	Washable	Used for
FT/ 11	99,90% at 0,3µ	U.S.G.C	Polyester	Non	Option	Yes	Dust
FT/ 13	99,97% at 0,3µ	U.S.G.C.K	Polyester	PFTE	Option	Yes	Welding fumes
FT/ 18	99,90% at 0,3µ	U.S.G.C	Polyester	Non	Option	Yes	Plasma/Laser

Should an air flow higher than 12000 m³/h be needed, the filter can be connected in parallel.

GEOVENT

Brevo B.V.
Dokwerkerstraat 3
2984 BJ Ridderkerk
Telefoon 0180-417344, Fax 0180-411563
Email : info@brevo.nl, Web : www.puntafzuiging.nl

Installation

Position	Explanation
A	Powerdetektor detects whether welding machine or grinder etc. is used or not and opens the damper and/or turns on the fan.
B	Quick turning motor damper HMO opens in 1 second, activated by Powerdetektor
C	Keep the air velocity constant to avoid dust deposits. Dust: 18 - 25 m/s Welding fumes: 10 - 15 m/s Laser/plasmaskæring: 15 - 20 m/s
D	Keep air velocity between 8 - 10 m/s. It is recommended to use a silencer to reduce noise from duct.
E	Pressure transducer transmits a 0-10Vsignal to the integrated frequency inverter placed on the fan, which regulates the fan speed, depending on the numbers of open dampers.
F	Control panel LWS for start/stop of the fan. Gets it's signal from the Powerdetektor.
G	In some countries the outlet must not be recirculated. The outlet will then often be let outside, typically 2 m above the roof. It is recomended to keep an air velocity at 8 m/s to minimize the pressure drop and noise. A silencer is recommended to reduce the noise level.

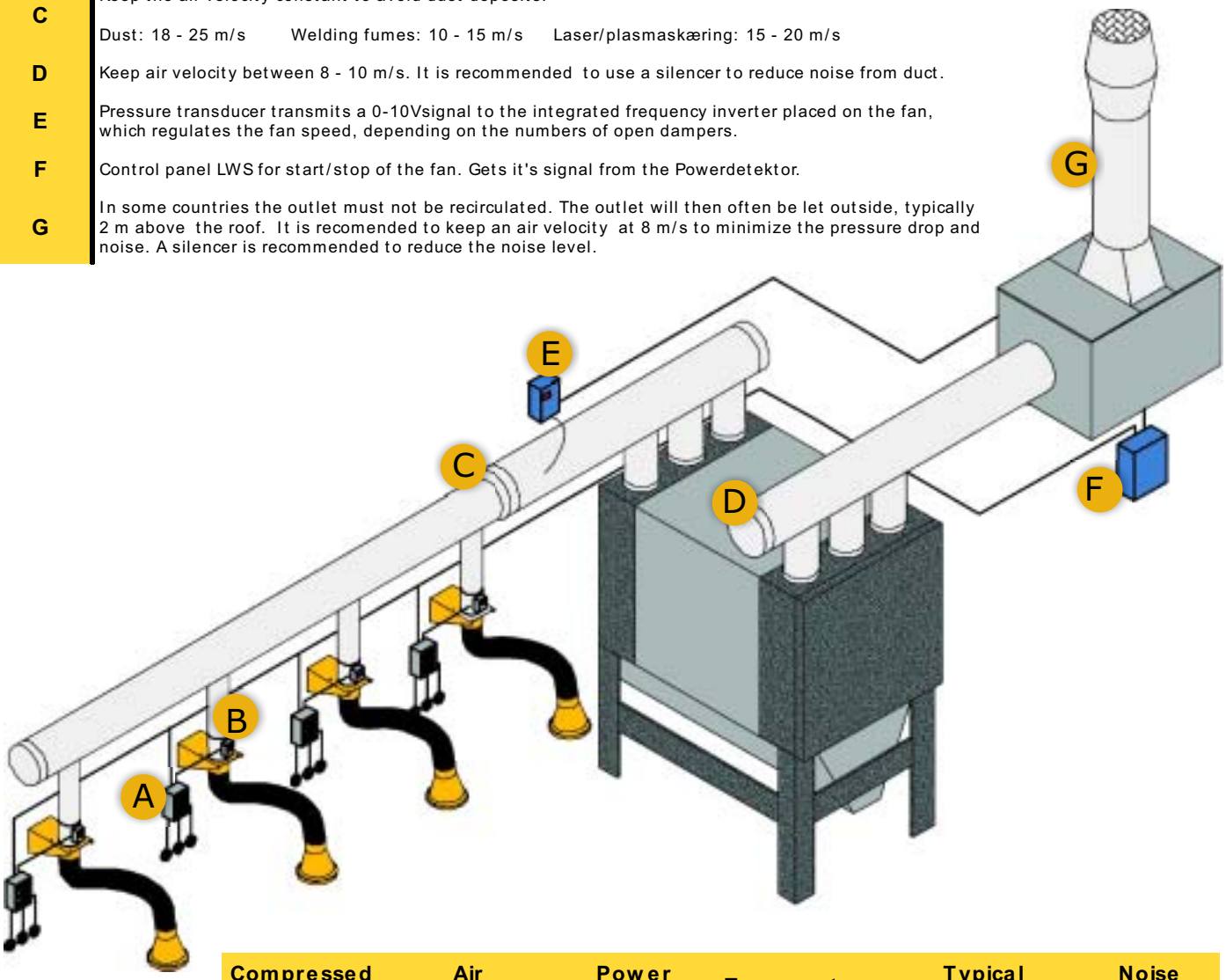

Compressed air	Air consumption	Power supply	Temperature	Typical pressure drop	Noise emmision
3,5 bar clean 6 dry air	0,6 liter/min pr. filter	24VDC or 230 VAC	-12°C - +65°C	1000-1500 Pa	< 68 dB(A)

GEOVENT

Brevo B.V.
Dokwerkerstraat 3
2984 BJ Ridderkerk
Telefoon 0180-417344, Fax 0180-411563
Email : info@brevo.nl, Web : www.puntafzuiging.nl

GeoFilter GFA

Dimensions

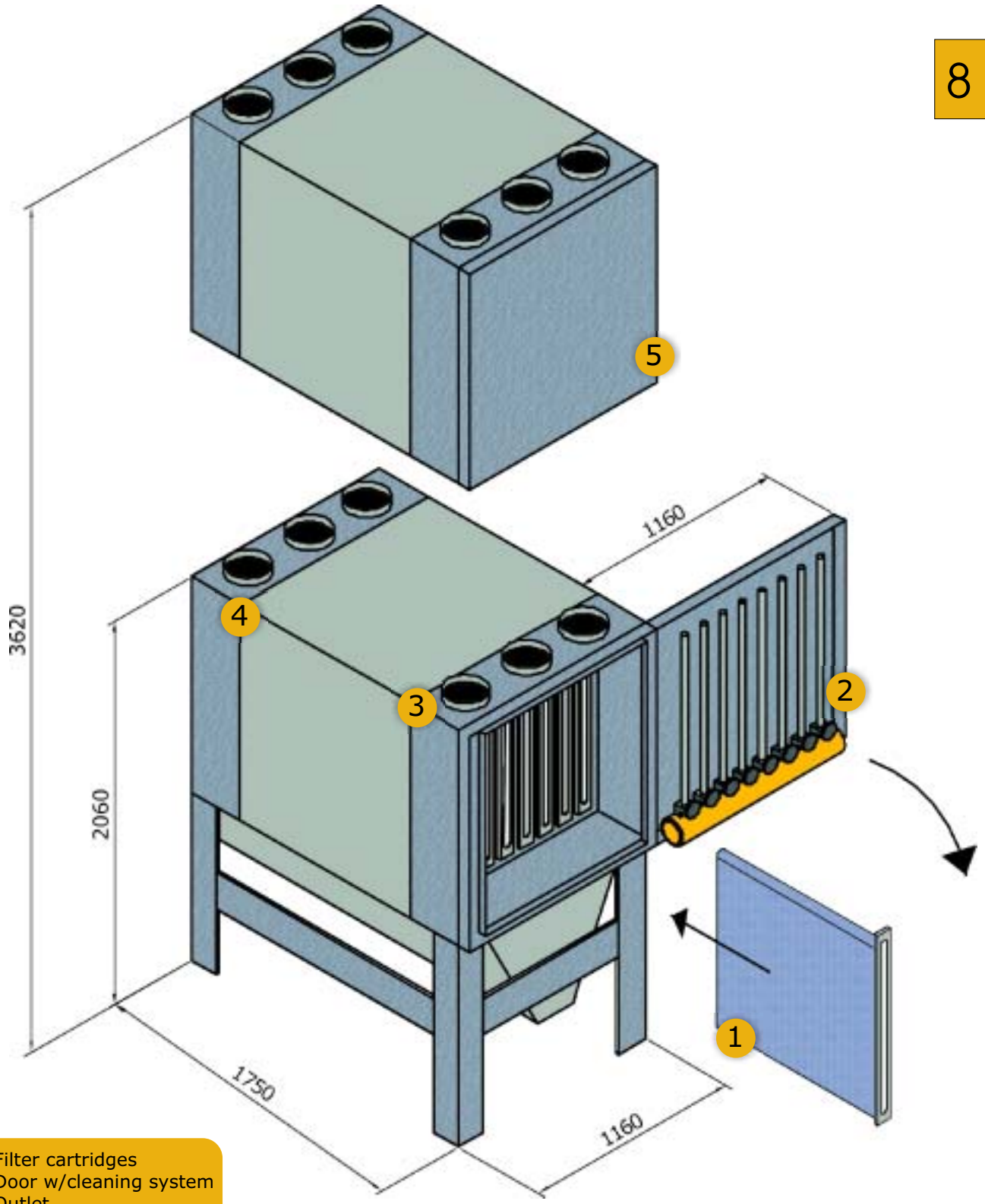

1. Filter cartridges
2. Door w/cleaning system
3. Outlet
4. Inlet
5. Extra module

GEOVENT

Brevo B.V.
Dokwerkerstraat 3
2984 BJ Ridderkerk
Telefoon 0180-417344, Fax 0180-411563
Email : info@brevo.nl, Web : www.puntafzuiging.nl

FApril 2002

GEOVENT

Documentatie en handleidingen van Geovent zijn in de Engelse taal. Enkele exemplaren zijn ook in de Duitse taal verkrijgbaar. Geovent heeft echter geen Nederlandstalige versie. Door continue productontwikkeling zijn de product-bladen aan wijziging onderhevig. Op onze website www.puntafzuiging.nl zullen wij steeds de nieuwste publicaties van Geovent publiceren.

U moet deze informatie zien als uitbreiding op de technische informatie die wij op onze website PuntAfzuiging.nl hebben opgenomen.

Heeft u aanvullende vragen, neem dan gerust contact met ons op.

BREVO

GEOVENT

Brevo B.V.
Dokwerkerstraat 3
2984 BJ Ridderkerk
Telefoon 0180-417344, Fax 0180-411563
Email : info@brevo.nl, Web : www.puntafzuiging.nl